Product	Female socket, solder	Pole	8 DIN
Area	M16 connectors IP 40	serie 581/ 680/ 682	Article number	09 0474 00 08

illustration

scale drawing

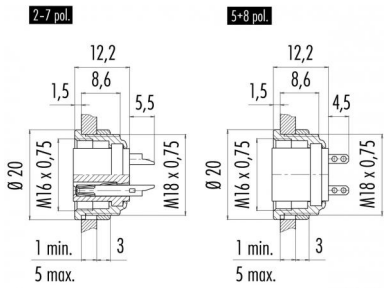

Contact Arrangement

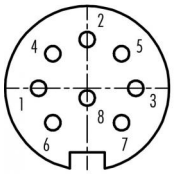

	X	Y
1	-3,50	0,00
2	0,00	3,50
3	3,50	0,00
4	-2,47	2,47
5	2,47	2,47
6	-2,47	-2,47
7	2,47	-2,47
8	0,00	-0,70

You can find the assembly instruction on the next page.

Technical data

Common values

Connector Design	Female socket
Connector locking system	Screw
Termination	solder
Wire gauge (mm)	0,75 mm²
Wire gauge (AWG)	20
Upper temperature	+85 °C
Lower temperature	-40 °C

Electrical values

Rated voltage	60 V
Rated impulse voltage	500
Pollution degree	1
Overvoltage category	I
Material group	III
Rated current (40°C)	5 A
Volume resistivity	≤ 5 mΩ
EMV compliance	shielded
Degree of protection	IP 40
Mechanical operation	>500 mating cycles

Material

Material of contact	CuSn (bronce)
Contact plating	Ag (silver)
Material of contact body	PBT (UL 94 V-0)
Material of housing	zinc diecasting, nickel plated

Cable data

Contacts 8 DIN, female socket, solder, 2 – 8 Contacts, silver plated contacts

Product	Female socket, solder		Pole	8 DIN
Area	M16 connectors IP 40	serie 581/ 680/ 682	Article number	09 0474 00 08
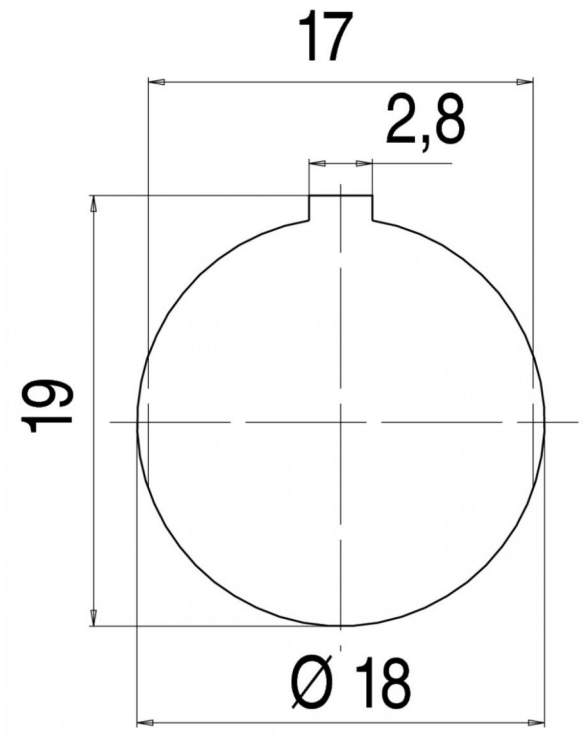
Installation instructions / Mounting cutout