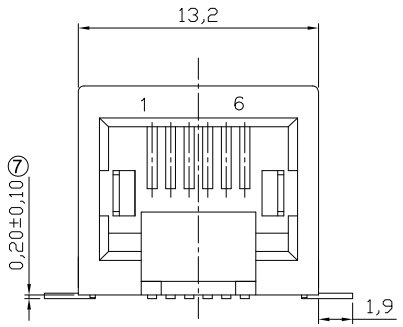


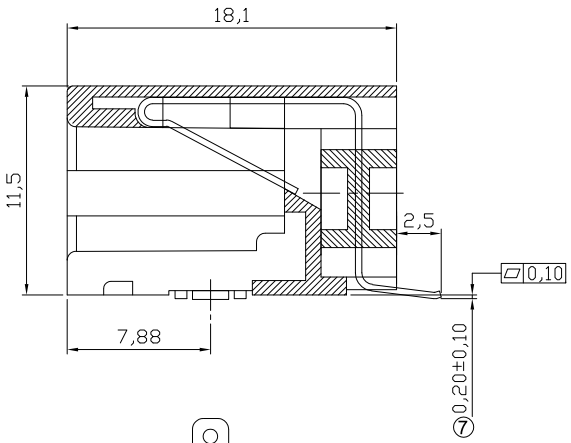


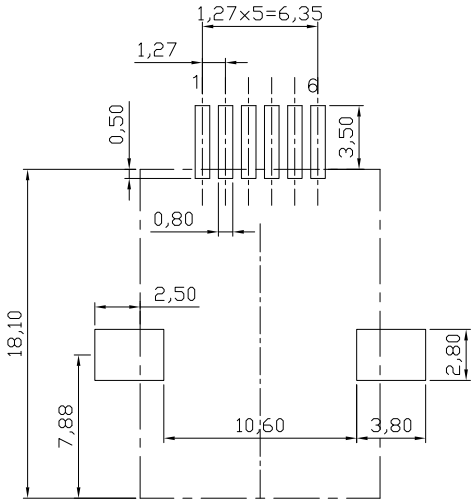


PCB Layout Component Side Shown

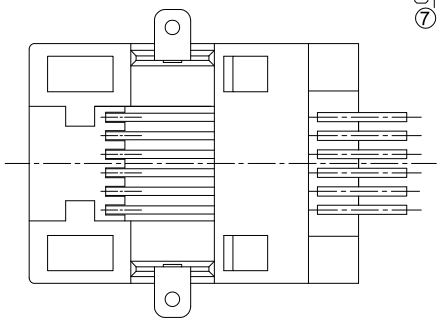

NOTES:
Mechanical:
1. Housing material : PA9T UL94V-0 ,
Color: Black
2. Contact material: Phosphor Bronze t=0.35mm
⑦ 3. Contact plating: 6u" Gold on contact area
Tin on solder side all over Nickel
4. Operating Life: 750 Cycles min.
5. PCB Retention Post-solder: 10 LBS min.
Electrical:
1. Voltage Rating: 125VAC.
2. Current Rating: 1.5AMP.
3. Contact Resistance: 35mΩ max.
4. Insulation Resistance: 1000MΩ min. @ 500 VDC
5. Dielectric Strength: 1000 VAC 60Hz, 1 min.
Environmental:
1. Storage: -40°C To +85°C
⑦ 2. Operation: -40°C~+85°C
⑦ 3. IR Reflow Soldering Temp: 255°C~265°C(5~10S)

⑦ Packing: 150pcs/Tape reel, 1500pcs/Carton

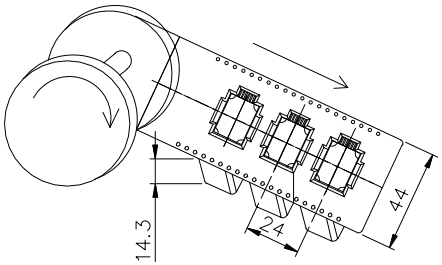


**RoHS compliant**
Unit:mm

File No.: E345352

| | | | | | | | | | |
|---|---|---|---|---|---|---|---|---|---|
| Scale | Free | | | | | | Date | Name | Customer-No. |
| TOLERANCE | | | | | | Drawn | 23.03.2005 | Hellwig | |
| X.X | ±0.20 | | | | | Approved | 27.05.2013 | Amy | ASSMANN WSW-No. A-20041-LP/SMT-A |
| X.XX | ±0.15 | | | | | | | | |
| X.XXX | ±0.10 | ⑦ | Update | 27.05.2013 | Amy | | | | Drawing-No. |
| DIM | TOL | ⑥ | Update | 15.07.2009 | Dean | | | | ASS 1050B CO rev07 |
| | | ⑤ | Drawing corrected | 18.03.2009 | N.Schulz | | | | |
| Angle | ±5° | Id. | Modification | Date | Name | | | | Replace SHEET |

ASSMANN WSW components

P90