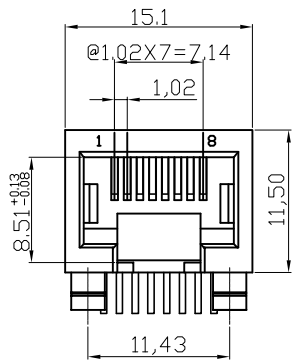

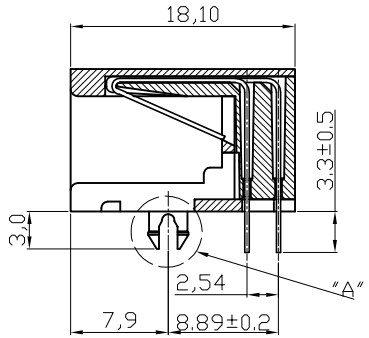

SECTION A-A

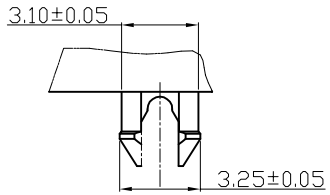

DETAIL "A"
SCALE 2:1

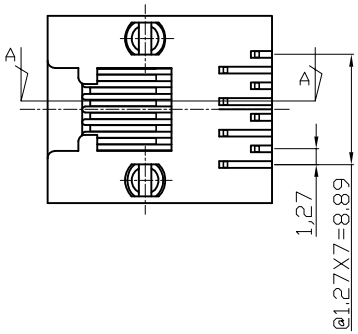

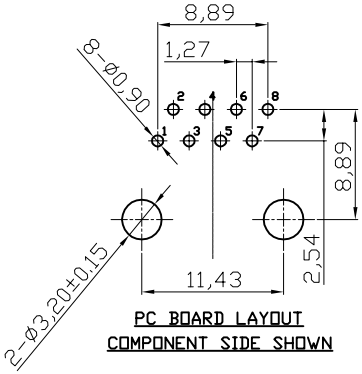

PC BOARD LAYOUT
COMPONENT SIDE SHOWN

ELECTRICAL:
1. VOLTAGE RATING : 125 VAC.
2. CURRENT RATING : 1.5 AMP.
3. CONTACT RESISTANCE : 35 MILLIOHMS MAX.
4. INSULATION RESISTANCE : 1000 MEGOHMS MIN. @ 500 VDC.
5. DIELECTRIC STRENGTH : 1000 VAC 60Hz, 1MIN.

MECHANICAL:
1. HOUSING MATERIAL :HIGH TEMP.UL94V-0.
2. CONTACT MATERIAL : PHOSPHOR BRONZE t=0.35mm.
④3. PLATING :6u" GOLD ON CONTACT AREA
100~200u" TIN ON SOLDER AREA
ALL OVER 30~50u" NICKEL.
4. OPERATING LIFE : 750 CYCLES MIN.
5. PCB RETENTION PRE-SOLDER : 1 LB MIN.
6. PCB RETENTION POST-SOLDER : 10 LBS MIN.

ENVIRONMENTAL:
1. STORAGE : -40°C TO +85°C.
③2. OPERATION : -40°C TO +85°C.

MATES WITH MODULAR PLUG CONFORMING TO
FCC PART 68, SUBPART F.

RoHS compliant
Unit: mm

Scale	Free
TOLERANCE	
.X	±0.20
.XX	±0.15
.XXX	±0.10
DIM	TOL
Angle	±5°

Id.	Modification	Date	Name
④	Update the contact plating	25.08.2015	Amy
③	Update	02.07.2009	Dean
②	Detail A added	15.08.2008	N.Schulz
①	Drawn	25.09.2008	N.Schulz

	Date	Name
Drawn	12.08.2008	N.Schulz
Approved	25.08.2015	Amy

ASSMANN wsw components

Customer-No.

ASSMANN WSW-No. A-20042/LP

Drawing-No. ASS 2729 CO rev04

Replace SHEET