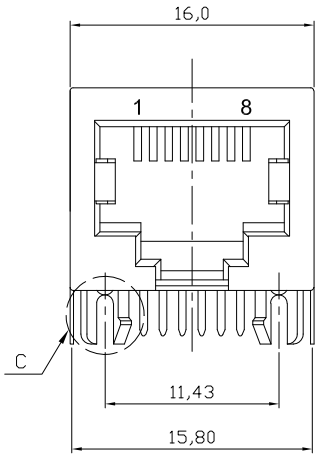

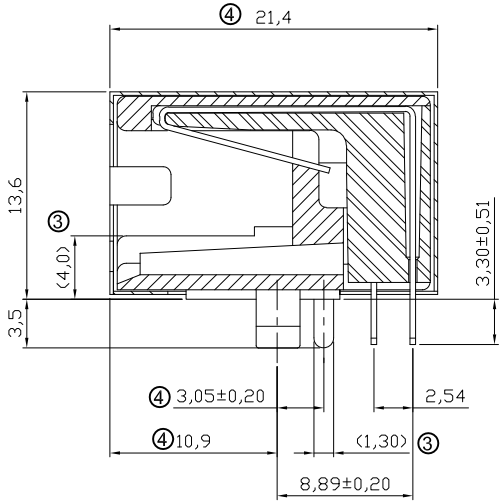

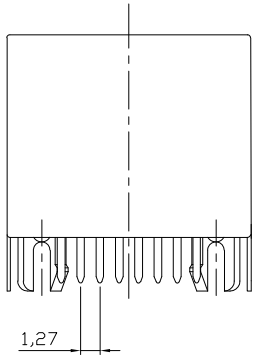

NOTES:
Mechanical:
1. Housing material : High Temp. Polyester UL94V-0 ,
Color: Black
2. Contact material: Phosphor Bronze t=0.35mm
③ 3. Contact plating: Contact Area---6u" Gold plating
Tails---100u"~200u" Tin over 30u"~80u" Nickel
④ 4. Shell material: Copper Alloy
5. Shell plating: Nickel plated
6. Operating Life: 750 Cycles min.
7. PCB Retention Pre-solder: 1 LB min.
8. PCB Retention Post-solder: 10 LBS min.
Electrical:
1. Voltage Rating: 125VAC.
2. Current Rating: 1.5AMP.
3. Contact Resistance: 45mΩ max.
4. Insulation Resistance: 1000MΩ min. @ 500 VDC
5. Dielectric Strength: 1000 VAC 60Hz, 1 min.
Environmental:
1. Storage: -40°C To +85°C
2. Operation: -40°C~+85°C
3. Wave Soldering Temperature: 255°C~265°C 5~10S

④ Packing: 70pcs/Tray,1680pcs/Carton

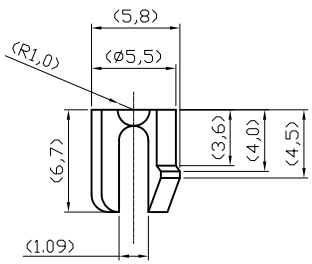

③ DETAIL "C"
SCALE 2:1

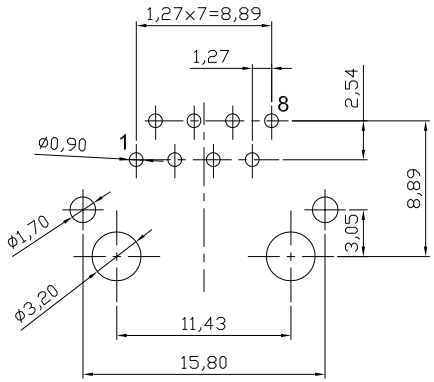

PC Board Layout
Component Side Shown

RoHS compliant
Unit:mm

File No.: E345352

Scale	Free
TOLERANCE	
X.X	±0.20
X.XX	±0.15
X.XXX	±0.10
DIM	TOL
Angle	±5°

Id.	Modification	Date	Name		Date	Name
⑤	Modify the dimensions	18.12.2014	Amy	Drawn	07.11.2007	N.Schulz
④	Update	27.05.2013	Amy	Approved	18.12.2014	Amy
③	Modify notes Add dimensions	02.07.2009	Dean			
②	Update	05.12.2007	N.Schulz			
①	Drawn	07.11.2007	N.Schulz			

ASSMANN WSW components

Customer-No.

ASSMANN WSW-No. A-20042-LP/FS

Drawing-No. ASS 0574 CO

rev05

Replace

SHEET

Downloaded from Arrow.com.