	COUNT	DESCRIPTION OF REVISIONS	BY	CHKD	DATE		COUNT	DESCRIPTION OF REVISIONS	BY	CHKD	DATE
1	1	DIS-C-000409	D.M	M.S	06.12.19						. .
											. .
											. .

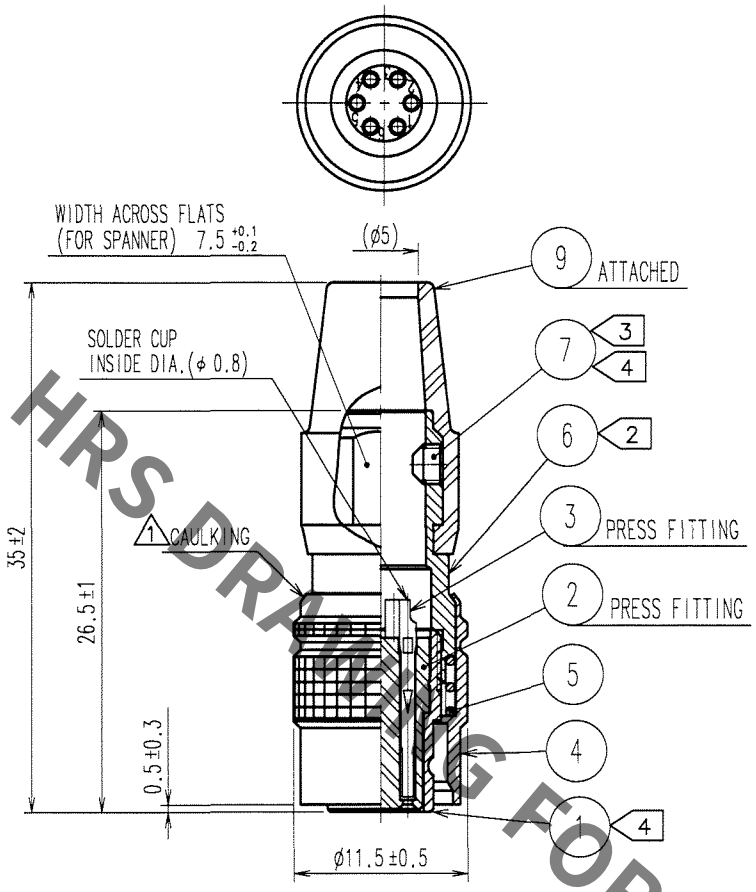

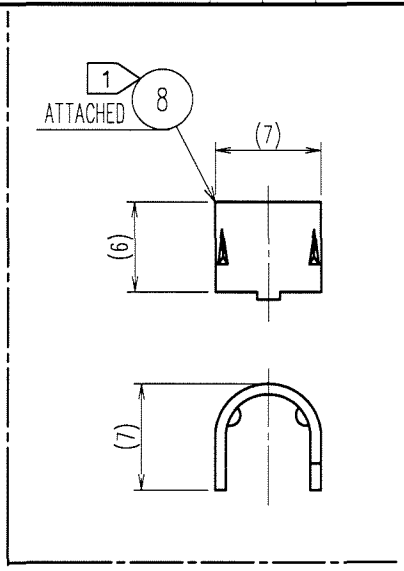

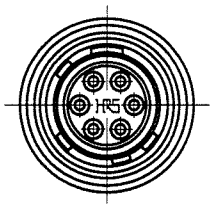

3 ACROSS FLATS HEXAGON HEAD OF REF.NO. ⑦: 1.27
THE RECOMMENDED CLAMP TORQUE,
REF.NO. ⑦: 0.3-0.4N・m.

4 LOCTITE 242,HENKEL JAPAN OR EQUIVALENT IS RECOMMENDED TO PREVENT REF.NO. ① AND ⑦ FROM LOOSENING.

5 ONE EXAMPLE OF THE ROTATION OF REF.NO. ⑥ TO REF.NO. ① IS SHOWN.

6 THE CABLE STRENGTH,ROTATORY STRENGTH AND OTHER CHARACTERISTICS MAY DIFFER,DEPENDING ON THE CABLE STRUCTURE.
PLEASE CONFIRM BEFORE THE USE.

NOTE 1 HAND CRIMPING TOOL.REF.NO. ⑧:
HR10A-TC-02(CL150-0041-2)
THE HOLE DIAMETER FOR CRIMPING:ϕ 5.3

2 THE RECOMMENDED CLAMP TORQUE,
REF.NO. ⑥: 1.5-2 N・m.

NO.	MATERIAL	FINISH, REMARKS
4	BRASS	MATTE FINISH NICKEL PLATED
3	PHOSPHOR BRONZE	GOLD PLATING: 0.2μm min. NICKEL UNDER PLATING: 2μm min.
2	POLYAMIDE	(BLACK) UL94V-0
1	ZINC ALLOY	MATTE FINISH NICKEL PLATED

NO.	MATERIAL	FINISH, REMARKS
9	CHLOROPRENE RUBBER	(BLACK)
8	BRASS	
7	STEEL	NICKEL PLATING HEXAGON SOCKET SET SCREW M2.6×0.45×2
6	BRASS	NICKEL PLATING
5	STEEL	NICKEL PLATING

CODE NO.(OLD)	DRAWN	DESIGNED	CHECKED	APPROVED	RELEASED
CL	M.SATO 06.08.01	D.MATSUNE 06.08.01	E.KUNII 06.08.01	M.SATO 06.08.01	

SACLE 2 : 1
UNITS mm

DRAWING NO. EDC4-020537-74

PART NO. HR10A-7P-6S(74)

HRS HIROSE ELECTRIC CO.,LTD.

CODE NO. CL110-0304-0-74

1/1

FORM NO.228

TO
R

HRS DRAWING FOR REFERENCE

Nov.1.2020 Copyright 2020 HIROSE ELECTRIC CO., LTD. All Rights Reserved.
In case of consideration for using Automotive equipment / device which demand high reliability, kindly contact our sales window correspondents.